DETAIL 1100

TIE-IN TO NON-DURO-LAST MEMBRANE

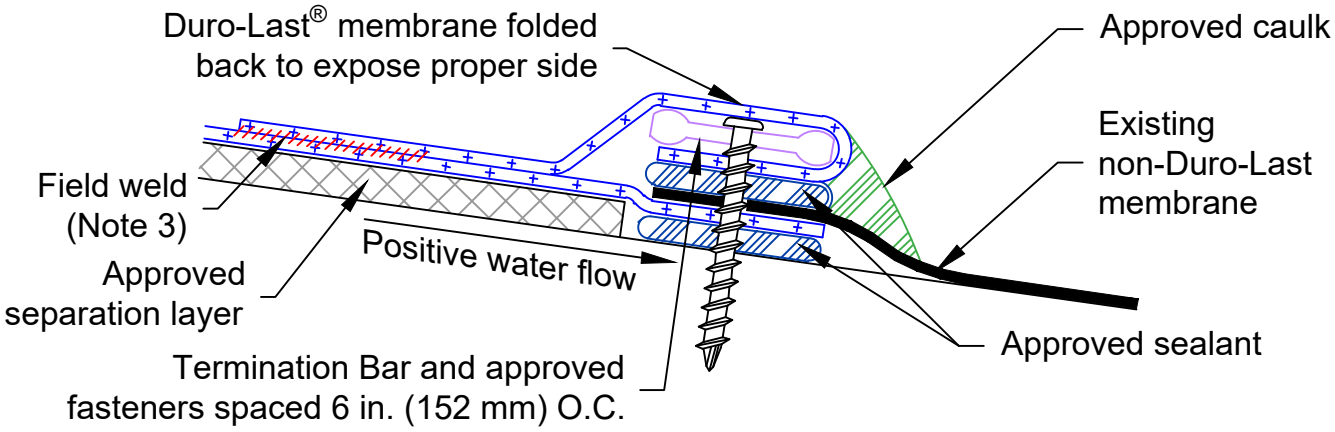

TIE-IN TO DURO-LAST MEMBRANE GREATER THAN ONE YEAR OLD

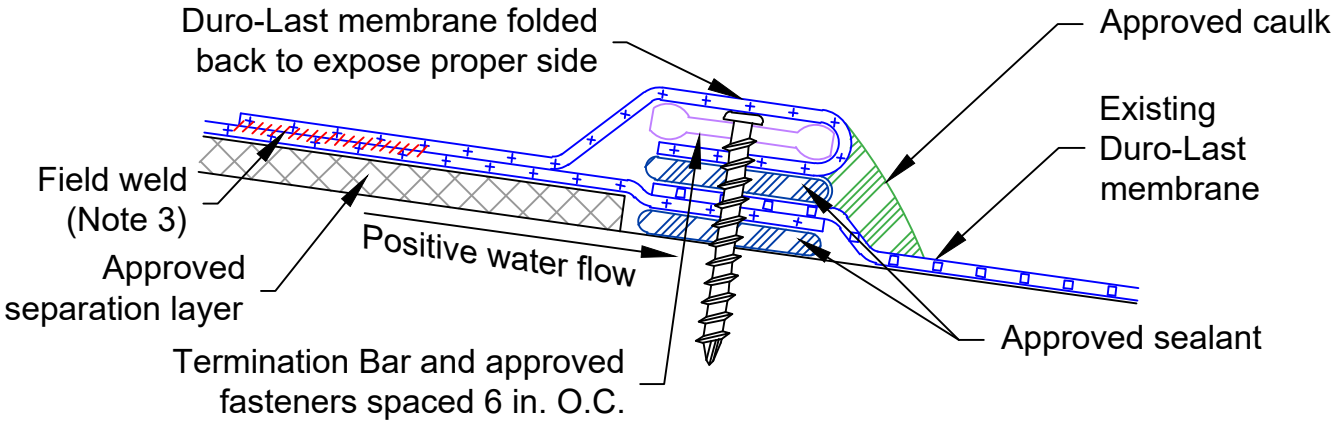

TIE-IN TO DURO-LAST MEMBRANE LESS THAN ONE YEAR OLD

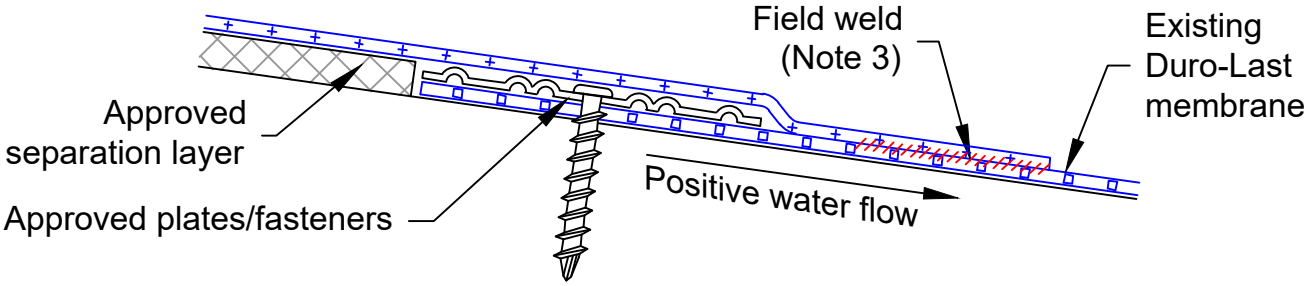

Note 1: Tie-in detail for all flat surfaces. The use of Detail 1070 will be required in conjunction with Detail 1100 when tie-in is across metal flutes.

Note 2: All field welds must be a minimum of 1-1/2 in. (40 mm) wide.

REVISED: 10/06/2026	GENERAL DETAIL FOR MECHANICALLY FASTENED SYSTEMS
CREATED: 01/01/2009	SINGLE-PLY ROOF TIE-IN
SCALE: NONE	NEW CONSTRUCTION OR RE-ROOF